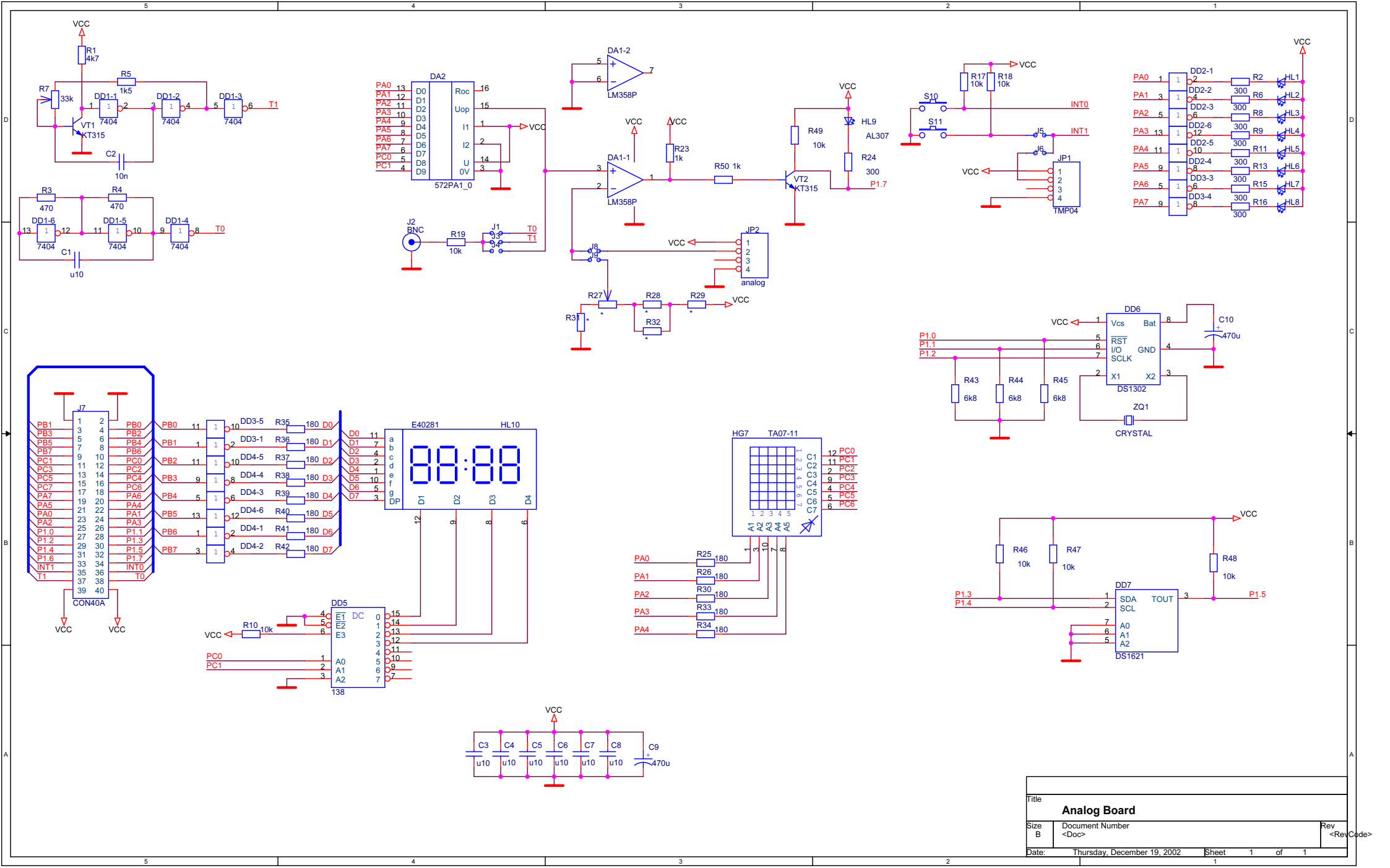

Title	**Analog Board**	
Size B	Document Number <Doc>	Rev <RevCode>
Date: Thursday, December 19, 2002	Sheet 1 of 1	